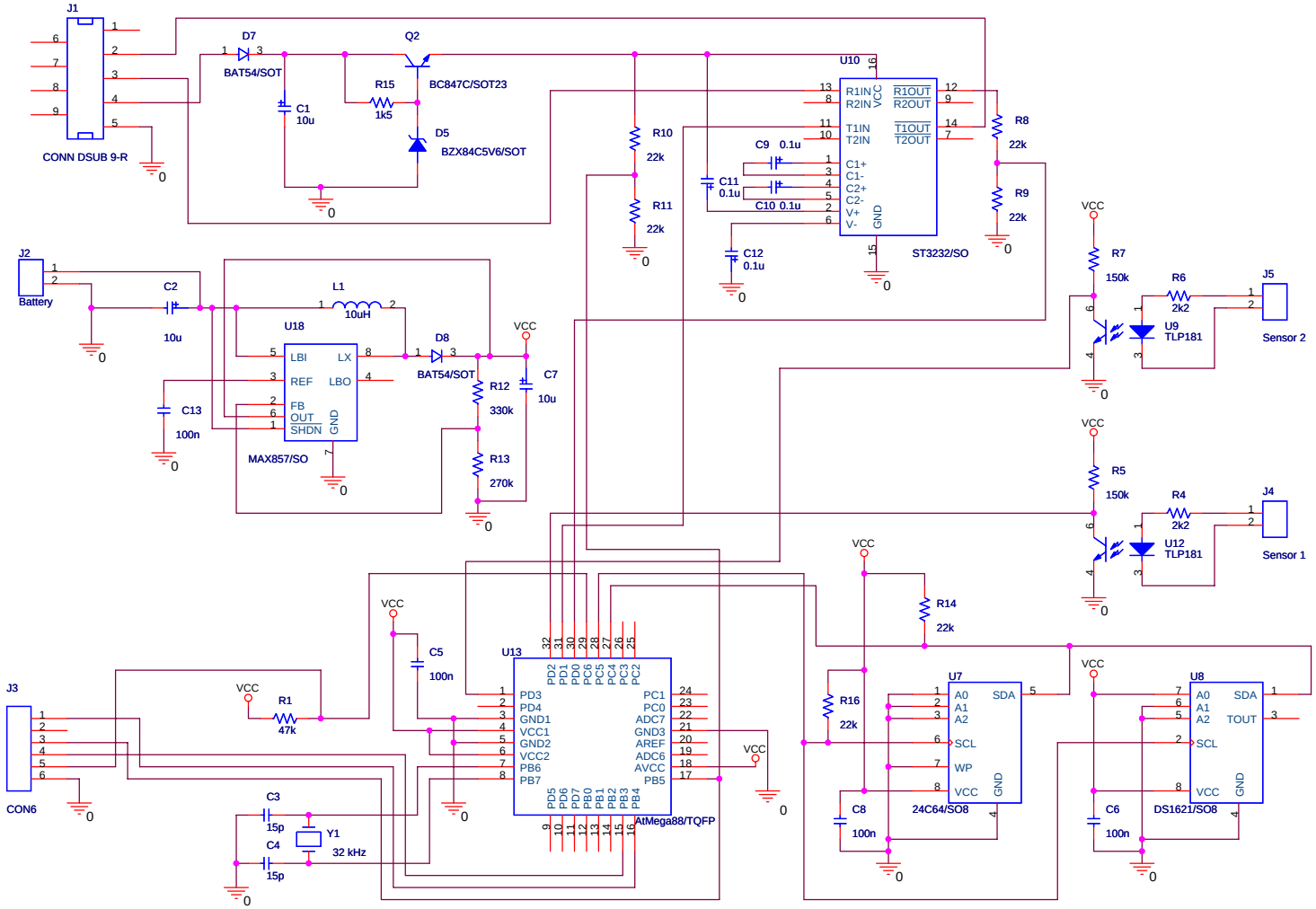

Title	Logger	
Size A3	Document Number <Doc>	Rev A2
Date: Monday, January 23, 2006	Sheet 1 of 1	